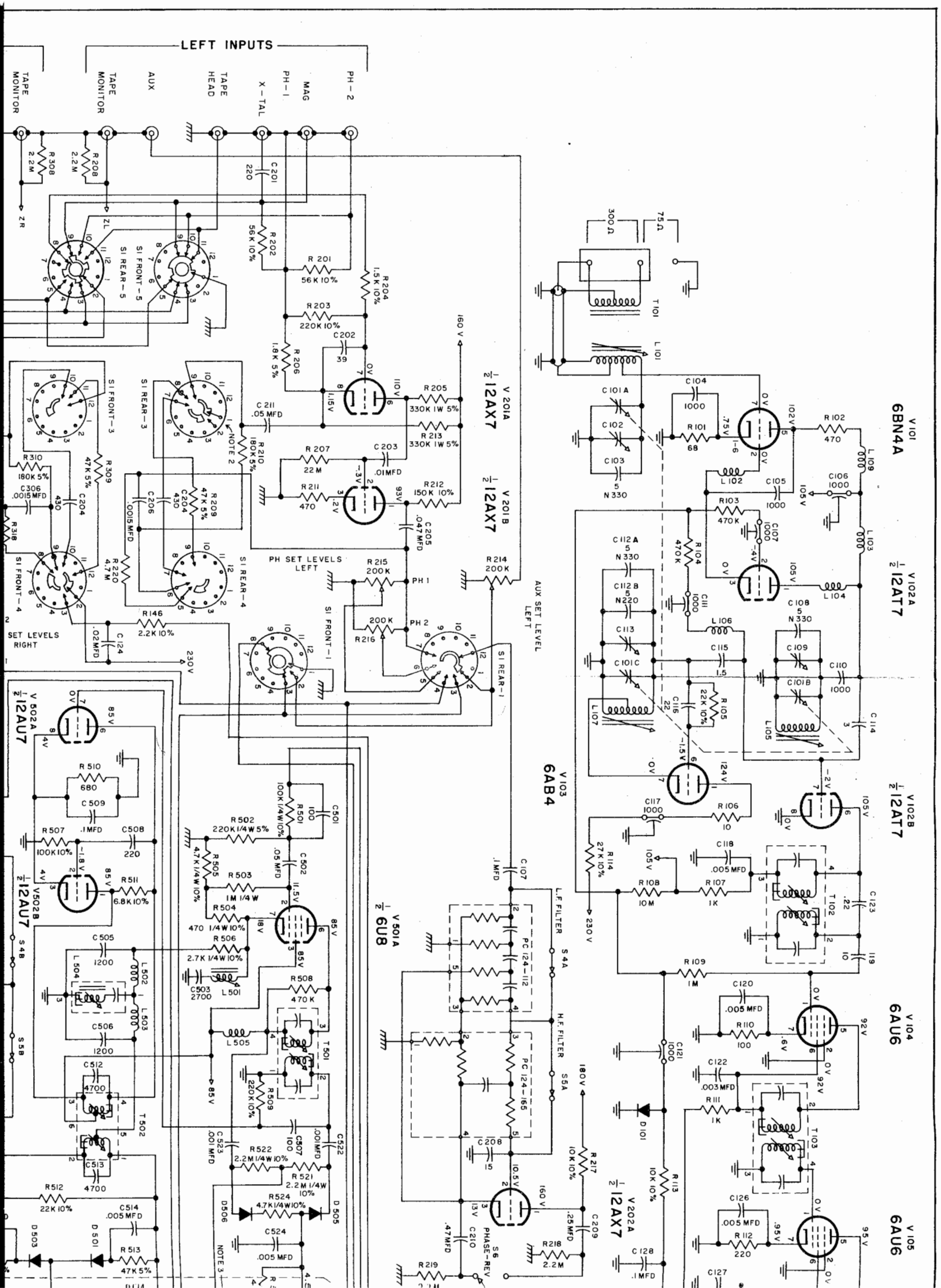
LEFT INPUTS
TAPE MONITOR
TAPE MONITOR
AUX
TAPE HEAD
X-TAL
PH-1
MAG
PH-2
R 308 2.2M
R 208 2.2M
C 201 220
R 202 56K 10%
R 201 56K 10%
R 204 1.5K 10%
R 203 220K 10%
C 202 39
R 206 1.8K 5%
V 201A ½ 12AX7
R 205 330K 1W 5%
R 213 330K 1W 5%
C 211 .05 MFD
R 210 180K 5%
NOTE 2
R 207 22M
C 203 .01MFD
R 211 470
V 201B ½ 12AX7
R 212 150K 10%
C 205 .047 MFD
PH SET LEVELS LEFT
R 215 200K
R 214 200K
PH 1
PH 2
R 216 200K
AUX SET LEVEL LEFT
SET LEVELS RIGHT
R 146 2.2K 10%
C 124 .02MFD
230 V
160 V
SI FRONT-1
SI FRONT-3
SI FRONT-4
SI FRONT-5
SI REAR-1
SI REAR-3
SI REAR-4
SI REAR-5
R 310 180K 5%
C 306 .0015 MFD
R 309 47K 5%
C 204 430
R 318
R 220 4.7M
C 206 .0015 MFD
R 209 47K 5%
C 204 430
V 502A ½ 12AU7
V 502B ½ 12AU7
R 510 680
C 509
R 507 100K 10%
.1MFD
C 508 220
R 511 6.8K 10%
S 4B
S 5B
C 505 1200
L 504
L 502
L 503
C 506 1200
C 512 4700
T 502
C 513 4700
R 512 22K 10%
C 514 .005 MFD
D 503
D 501
R 513 47K 5%
R 501 100K 1/4W 10%
C 501 100
R 502 220K 1/4W 5%
C 502 .05 MFD
R 505 4.7K 1/4W 10%
R 503 1M 1/4W
R 504 470 1/4W 10%
R 506 2.7K 1/4W 10%
C 503 2700
L 501
V 501A ½ 6U8
R 508 470K
L 505
T 501
R 509 220K 10%
C 523 .001 MFD
R 522 2.2M 1/4W 10%
C 507 100
C 522 .001MFD
R 521 2.2M 1/4W 10%
R 524 4.7K 1/4W 10%
D 506
D 505
C 524 .005 MFD
NOTE 3
C 107 .1 MFD
L.F. FILTER
S 4A
PC 124-112
H.F. FILTER
S 5A
PC 124-165
C 208 15
C 210 .47MFD
S 6 PHASE-REV
R 219
R 218 2.2M
C 209 .25 MFD
R 217 10K 10%
V 202A ½ 12AX7
C 128 .1MFD
C 127
300 Ω
75 Ω
T 101
L 101
V 101 6BN4A
C 101A
C 102
C 103 5 N330
C 104 1000
R 101 68
R 102 470
L 109
L 102
C 105 1000
C 106 1000
105 V
R 103 470K
C 107 1000
L 103
V 102A ½ 12AT7
R 104 470K
C 111 1000
L 104
C 112A 5 N330
C 112B 5 N220
C 113
C 101C
L 106
C 108 5 N330
C 109
C 110 1000
C 101B
C 115 1.5
C 116 22
R 105 22K 10%
L 107
L 105
C 114 3
V 103 6AB4
C 117 1000
R 106 10
R 114 27K 10%
V 102B ½ 12AT7
C 118 .005 MFD
R 108 10M
R 107 1K
T 102
C 123 .22
119
R 109 1M
C 120 .005 MFD
R 110 100
V 104 6AU6
C 121 1000
C 122 .003 MFD
R 111 1K
D 101
T 103
R 113 10K 10%
C 126 .005 MFD
R 112 220
V 105 6AU6
C 128 .1MFD
C 127

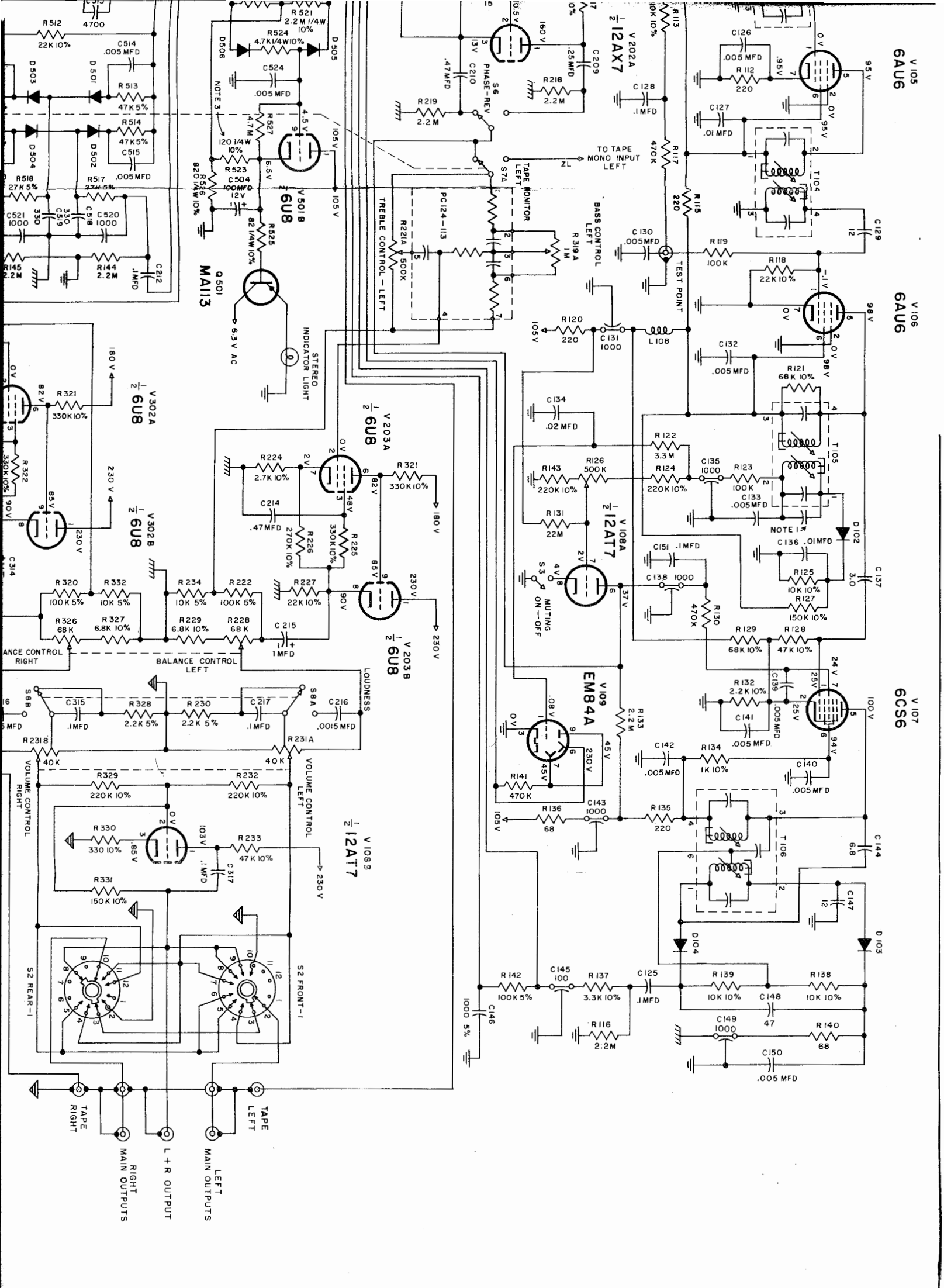
V 105
6AU6
V 106
6AU6
V 107
6CS6
V 202A
½ 12AX7
V 501B
6U8
Q 501
MA113
V 302A
½ 6U8
V 302B
½ 6U8
V 203A
½ 6U8
V 203B
½ 6U8
V 108A
½ 12AT7
V 108B
½ 12AT7
V 109
EM84A
TO TAPE MONO INPUT LEFT
TAPE MONITOR LEFT
BASS CONTROL LEFT
TREBLE CONTROL – LEFT
TEST POINT
STEREO INDICATOR LIGHT
MUTING ON—OFF
PHASE-REV
BALANCE CONTROL RIGHT
BALANCE CONTROL LEFT
LOUDNESS
VOLUME CONTROL RIGHT
VOLUME CONTROL LEFT
S2 REAR-1
S2 FRONT-1
TAPE RIGHT
TAPE LEFT
RIGHT MAIN OUTPUTS
L + R OUTPUT
LEFT MAIN OUTPUTS

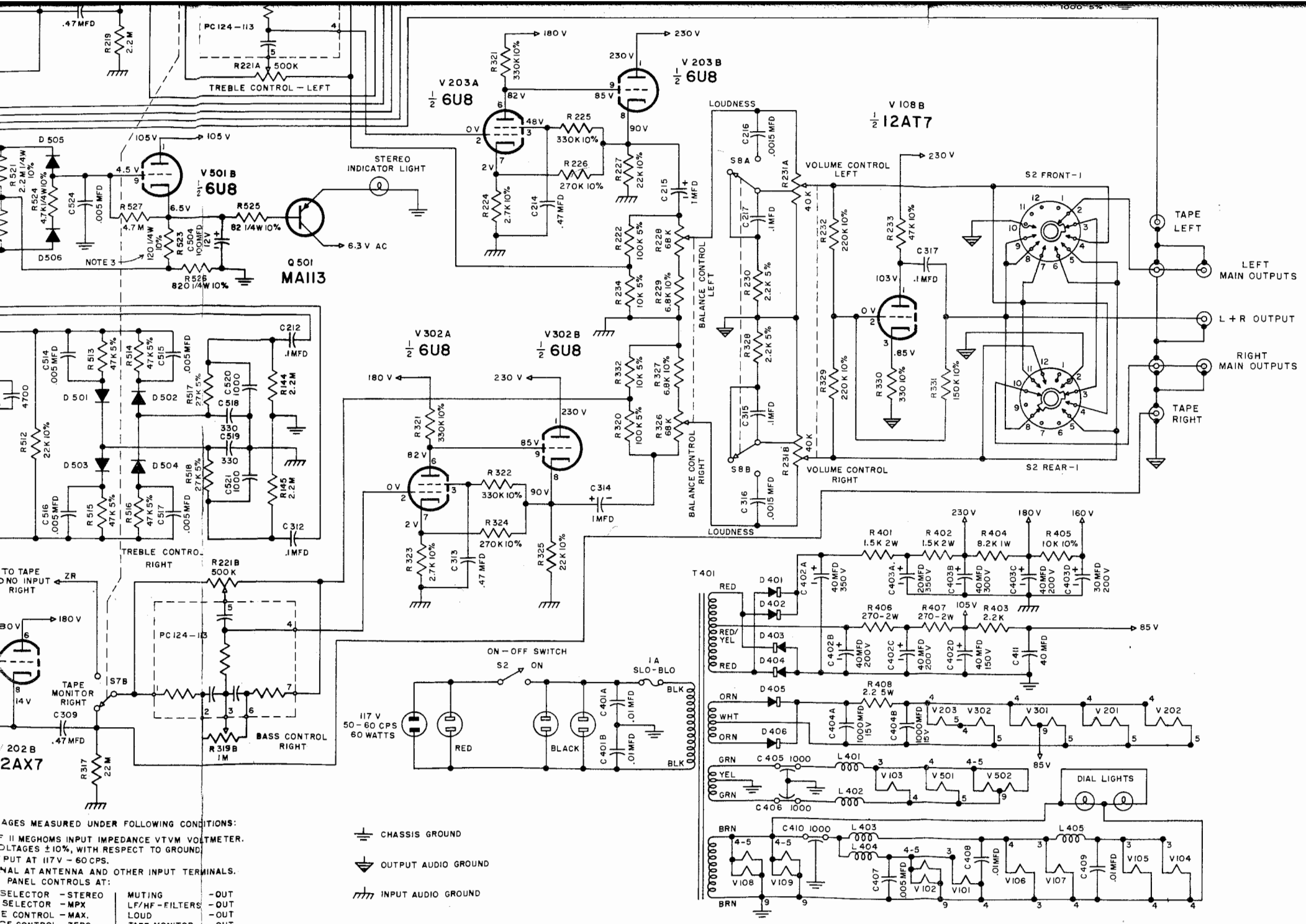

AGES MEASURED UNDER FOLLOWING CONDITIONS:
F 11 MEGHOMS INPUT IMPEDANCE VTVM VOLTMETER.
OLTAGES ±10%, WITH RESPECT TO GROUND.
PUT AT 117V – 60 CPS.
NAL AT ANTENNA AND OTHER INPUT TERMINALS.
PANEL CONTROLS AT:

SELECTOR	-STEREO	MUTING	-OUT
SELECTOR	-MPX	LF/HF-FILTERS	-OUT
E CONTROL	-MAX.	LOUD	-OUT
CE CONTROL	-ZERO	TAPE MONITOR	-OUT
CONTROLS	-FLAT	PHASE	-0°

MATERIAL	TITLE MX 110 SCHEMATIC		PART NO.
FINISH	McIntosh LABORATORY INC. 2 Chambers St., Binghamton, N.Y.		USED ON:
TOLERANCES – Unless otherwise specified: ±½° Angles. ± 1/64 fractions. ± .003 Decimals	SCALE	DRN BY VG / CHKD BB	DATE 6.11.62 / APPD SAC	DWG NO. SC124-231	REV

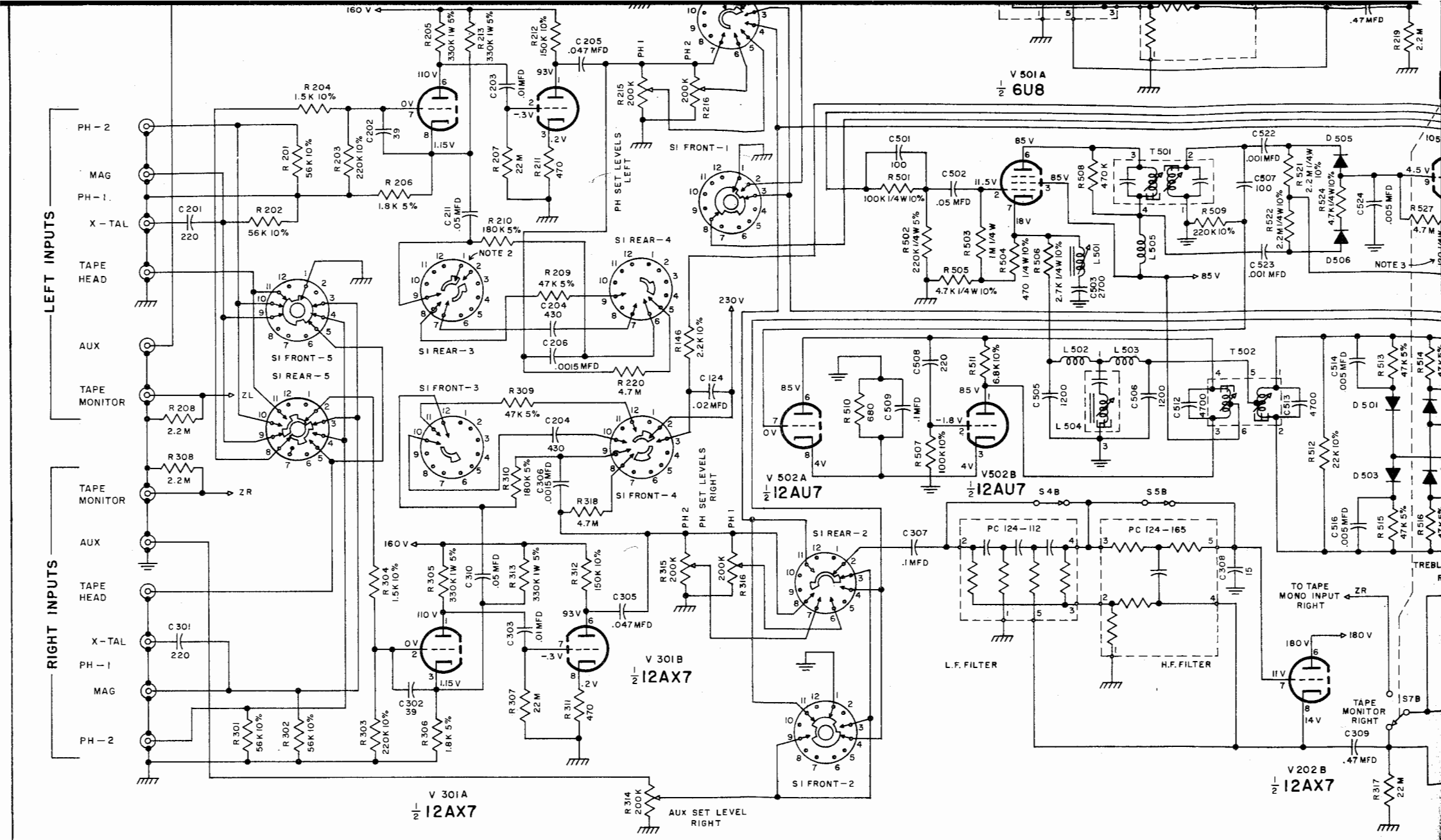

NOTES:

1 - IN SOME UNITS, C=15mmFD, N150.
2 - BOTH CONTACTS NOT USED FUNCTIONALLY. CONTACT 1 IS USED AS TIE-POINT.
3 - IN SOME UNITS R523=150Ω.

UNLESS OTHERWISE SPECIFIED
ALL RESISTORS 1/2 W 20%
ALL CAPACITORS IN mmFD
ALL INDUCTORS IN MICRO H

FM. IF : 10.7 MC

ALL SWITCHES SHOWN IN CCW POSITION

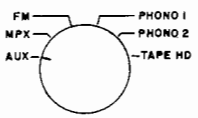

INPUT SELECTOR SWITCH, S1

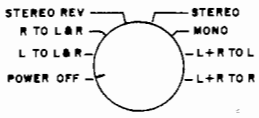

MODE SELECTOR SWITCH, S2

ALL VOLTAGES MEASURED UNDER FOLL

1 - USE OF 11 MEGHOMS INPUT IMPEDANC
2 - ALL VOLTAGES ±10%, WITH RESPECT
3 - A.C. INPUT AT 117V - 60CPS.
4 - NO SIGNAL AT ANTENNA AND OTHER
5 - FRONT PANEL CONTROLS AT:

MODE SELECTOR	- STEREO
INPUT SELECTOR	- MPX
VOLUME CONTROL	- MAX.
BALANCE CONTROL	- ZERO
TONE CONTROLS	- FLAT

MUT
LF/
LOU
TAP
PHA